Geometry - Trapezium Area

Q1

Work out the area of the shape shown.

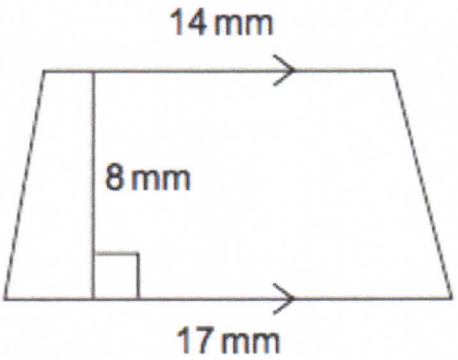

Not drawn accurately

Answer ..... mm^2 *(2 marks)*

Geometry - Trapezium Area

Q2

In the trapezium, a = 6.5 m, b = 8.3 m and h = 3.2 m

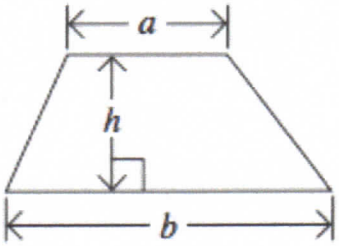

Not drawn accurately

The trapezium is the cross-section of a tunnel.
The tunnel is 200 metres long.

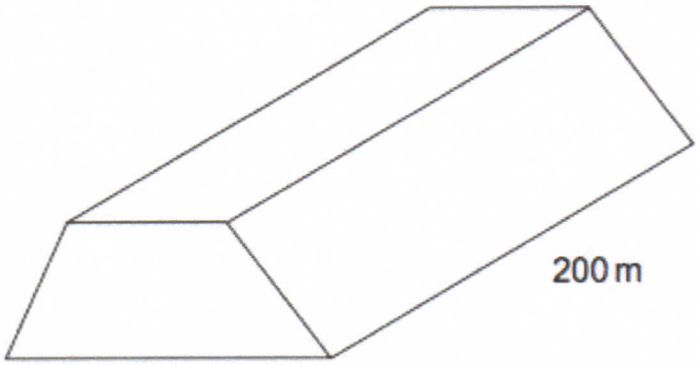

Work out the volume of the tunnel.

Answer ..... m^3 *(4 marks)*

Geometry - Trapezium Area

Q1

Work out the area of the shape shown.

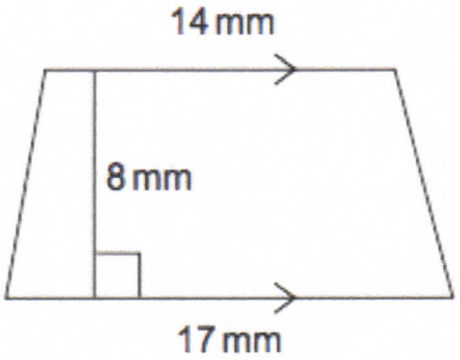

Not drawn accurately

$$\text{Area} = \frac{(17+14)\times 8}{2} = 124 \text{ mm}^2$$

Answer 124 mm^2 *(2 marks)*

Geometry - Trapezium Area

Q2

In the trapezium, $a = 6.5$ m, $b = 8.3$ m and $h = 3.2$ m

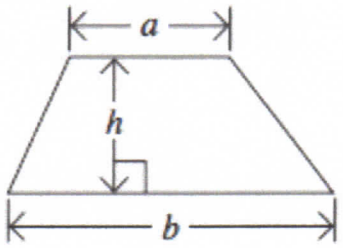

Not drawn accurately

The trapezium is the cross-section of a tunnel.
The tunnel is 200 metres long.

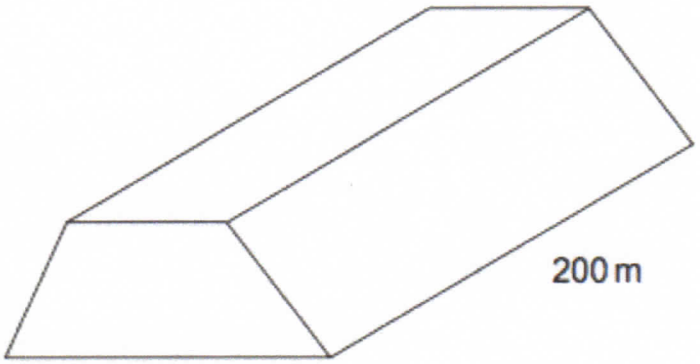

Work out the volume of the tunnel.

Volume = Area of trapezium cross-section × length

$$= \frac{(6.5 + 8.3) \times 3.2}{2} \times 200$$

$$= 4736 \text{ m}^3$$

Answer ..... 4,736 ..... m^3 *(4 marks)*